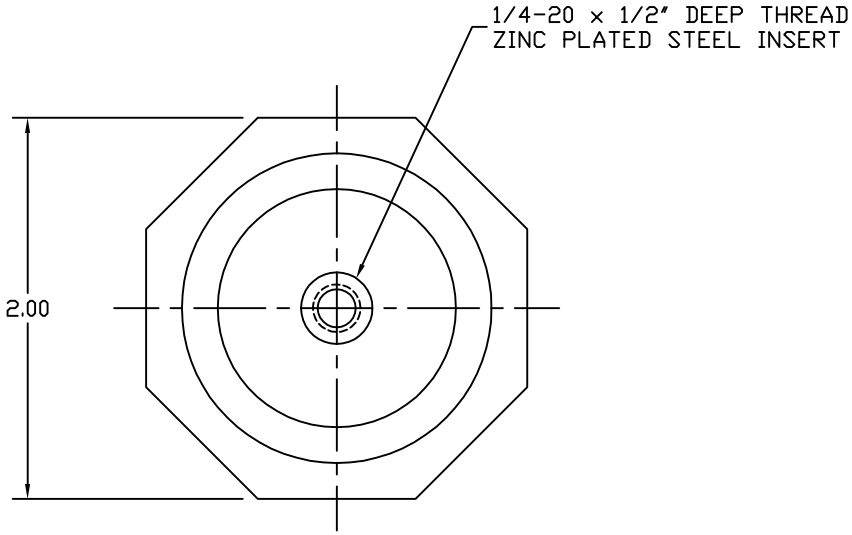

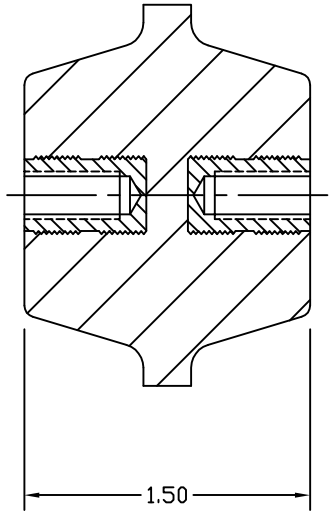

STANDOFF INSULATOR

MATERIAL: THERMOSETTING FIBERGLASS REINFORCED POLYESTER
EST. WEIGHT: 0.2 LBS
SHAPE: OCTAGON
THREAD: 1/4-20 X ½ IN STEEL INSERTS
VOLTAGE RATING 1500 V

APPROVED

☐ AS DRAWN: _____

☐ AS NOTED: _____

DATE: _____

THIS DOCUMENT AND THE CONTENTS THEREOF IS THE PROPERTY OF HARGER INC., AND IS FURNISHED TO YOU FOR INFORMATION ONLY. THE INFORMATION CONTAINED HEREIN IS CONFIDENTIAL AND OF A PROPRIETARY NATURE AND MUST NOT BE DISCLOSED TO THIRD PARTIES WITHOUT THE EXPRESS WRITTEN APPROVAL OF HARGER INC.

LET	REVISION	DATE	BY
–	–	–	–
A	REVISED FROM ORIGINAL BORDER	112707	DVB

TOLERANCES UNLESS NOTED:
FRACTIONAL +/- 1/16
.00 +/- .030
.000 +/- .010

3RD ANGLE PROJECTION

PART NO. 4150S2
1/4 X 2 X 1-1/2 OCTAGON ISULATOR
– –

DRAWN BY: LAL
CHECKED BY: –
DATE: 051399

HARGER™
301 ZIEGLER DRIVE
GRAYSLAKE, IL 60030
(847) 548-8700

REVISION: A
SCALE: FULL
SHEET: 1 OF 1