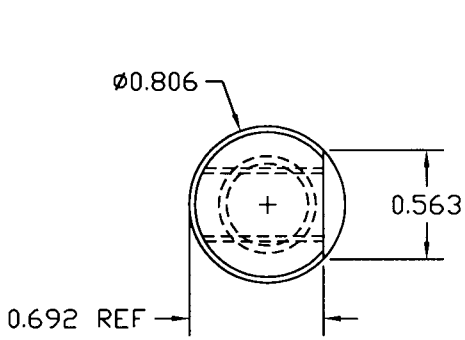

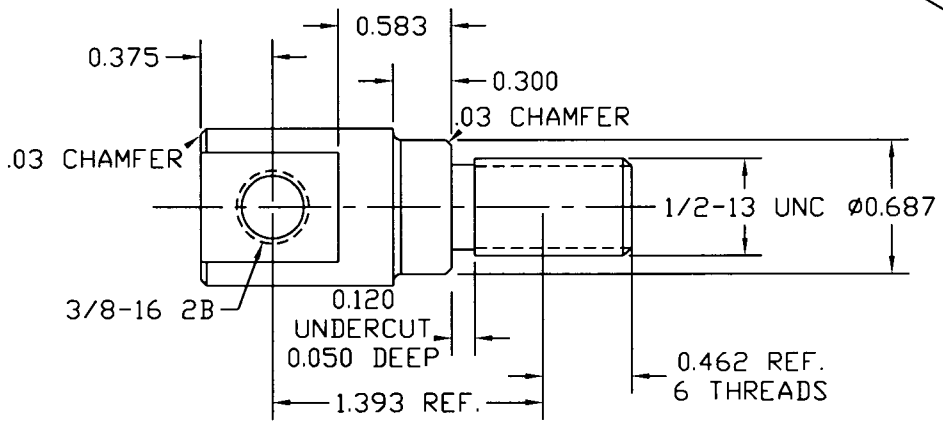

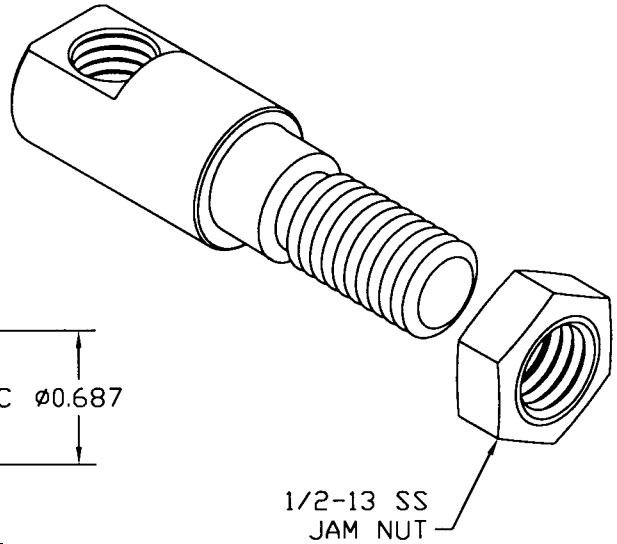

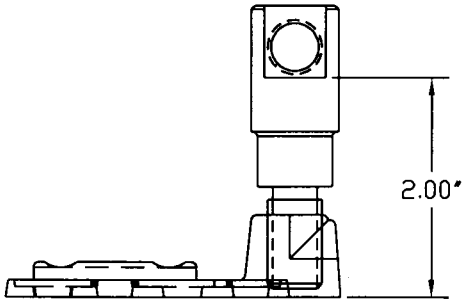

THIS DOCUMENT AND THE CONTENTS THEREOF IS THE PROPERTY OF HARGER INC., AND IS FURNISHED TO YOU FOR INFORMATION ONLY. THE INFORMATION CONTAINED HEREIN IS CONFIDENTIAL AND OF A PROPRIETARY NATURE AND MUST NOT BE DISCLOSED TO THIRD PARTIES WITHOUT THE EXPRESS WRITTEN APPROVAL OF HARGER INC.

LET	REVISION	DATE	BY
–	–	–	–

TOLERANCES UNLESS NOTED:
FRACTIONAL +/- 1/64
.00 +/- .010
.000 +/- .005

PART NO. BPBE2-3/8

PARAPET EXTENSION

– –

DRAWN BY: WSM
CHECKED BY:
DATE: 090302

HARGER™

301 ZIEGLER DRIVE
GRAYSLAKE, IL 60030
(847) 548-8700

REVISION: –
SCALE: FULL
SHEET: 1 OF 1

F:\TECHVOL\ASSEMBLY\PARTS\BPBE238.dwg