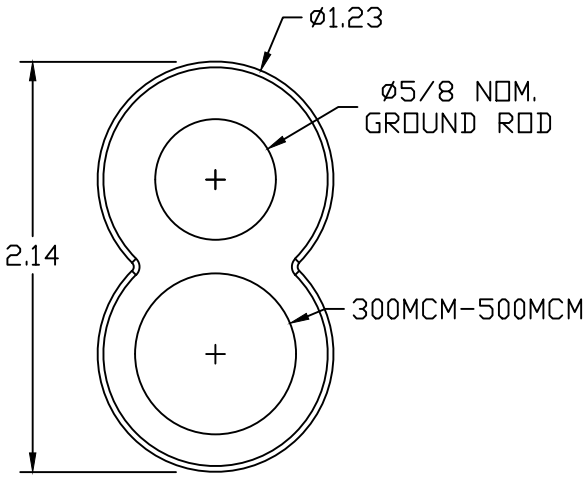


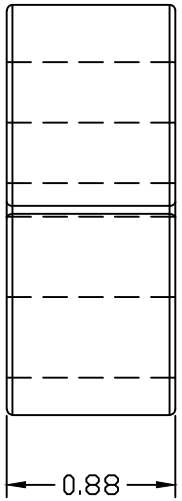


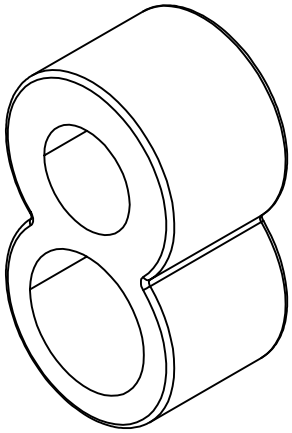

MATERIAL: HIGH CONDUCTIVITY
COPPER ALLOY

GROUND ROD PRECRIMP U2CABT
CRIMP DIE INDEX U998

# HIGH COMPRESSION GROUNDING

EST WT 0.377#

APPROVED

☐ AS DRAWN: _____

☐ AS NOTED: _____

DATE: _____

THIS DOCUMENT AND THE CONTENTS THEREOF IS THE PROPERTY OF HARGER INC., AND IS FURNISHED TO YOU FOR INFORMATION ONLY. THE INFORMATION CONTAINED HEREIN IS CONFIDENTIAL AND OF A PROPRIETARY NATURE AND MUST NOT BE DISCLOSED TO THIRD PARTIES WITHOUT THE EXPRESS WRITTEN APPROVAL OF HARGER INC.

| LET | REVISION | DATE | BY |
|---|---|---|---|
| – | – | – | – |

TOLERANCES UNLESS NOTED:
FRACTIONAL +/- 1/16
.00 +/- .03
.000 +/- .010

3RD ANGLE PROJECTION

PART NO. CGCRFE50030058
HARGROUND
– –

DRAWN BY: LAL
CHECKED BY:
DATE: 080223

HARGER™
301 ZIEGLER DRIVE
GRAYSLAKE, IL 60030
(847) 548-8700

REVISION: –
SCALE: FULL
SHEET: 1 OF 1