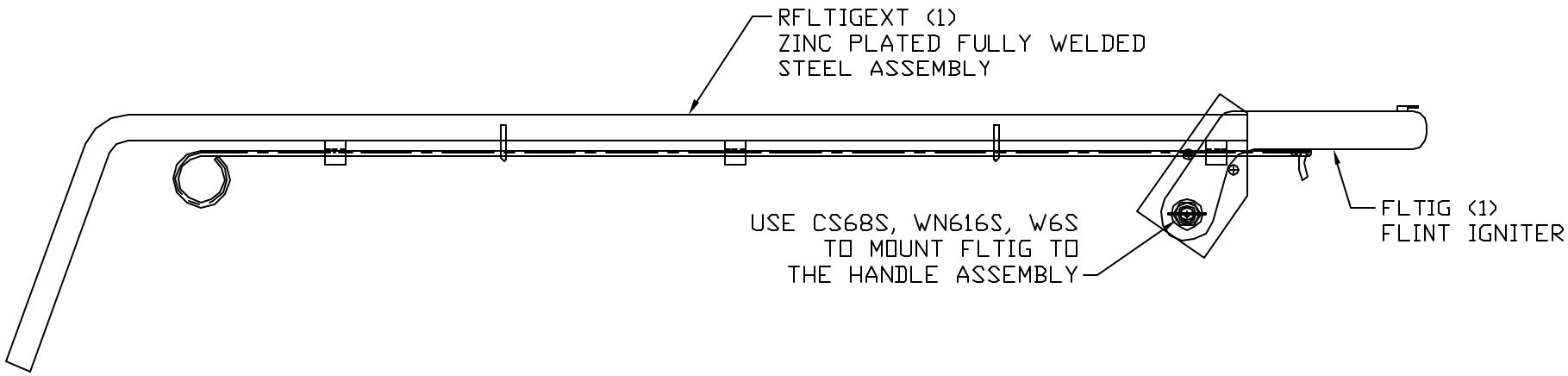

FLINT IGNITER EXTENSION

EST. WEIGHT 2.4 LBS

APPROVED

☐ AS DRAWN: _____

☐ AS NOTED: _____

DATE: _____

THIS DOCUMENT AND THE CONTENTS THEREOF IS THE PROPERTY OF HARGER INC., AND IS FURNISHED TO YOU FOR INFORMATION ONLY. THE INFORMATION CONTAINED HEREIN IS CONFIDENTIAL AND OF A PROPRIETARY NATURE AND MUST NOT BE DISCLOSED TO THIRD PARTIES WITHOUT THE EXPRESS WRITTEN APPROVAL OF HARGER INC.

LET	REVISION	DATE	BY
–	–	–	–
–	–	–	–
–	–	–	–
–	–	–	–
–	–	–	–
A	ADDED CARTON TO BOM	060605	LAL

TOLERANCES UNLESS NOTED:
FRACTIONAL +/- 1/16
.00 +/- .030
.000 +/- .010

3RD ANGLE PROJECTION

PART NO. FLTIGEXT

FLINT INGITER EXTENSION

HARGER / ULTRAWELD –

DRAWN BY: EHS

CHECKED BY: –

DATE: 101404

HARGER™
301 ZIEGLER DRIVE
GRAYSLAKE, IL 60030
(847) 548-8700

REVISION: A

SCALE: 1/4

SHEET: 1 OF 1