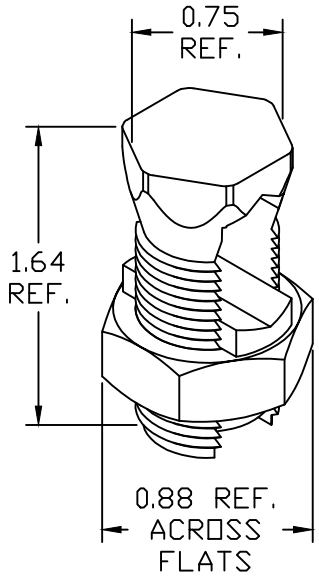

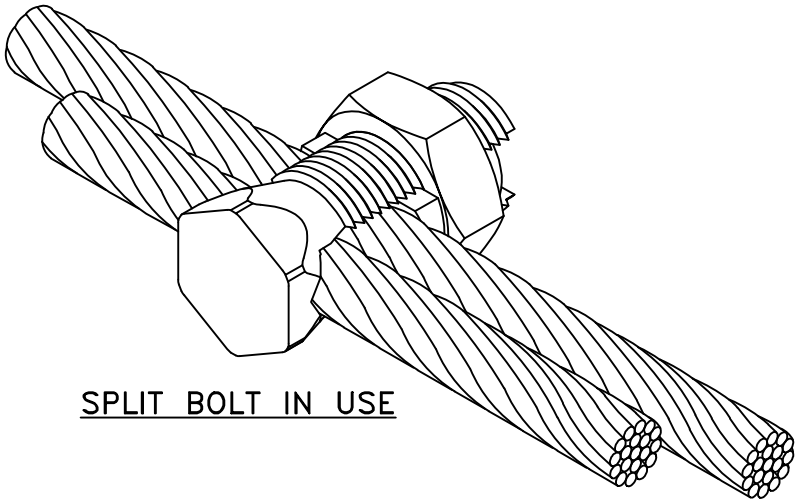

SPLIT BOLT IN USE

COPPER ALLOY SPLIT BOLT CONNECTOR

RANGE FOR EQUAL RUN AND TAP: 1/0 STR - #4 SOL
MINIMUM TAP #14 SOL

20 PCS PER CARTON

EST WT 0.16#

APPROVED

☐ AS DRAWN:

☐ AS NOTED:

DATE:

THIS DOCUMENT AND THE CONTENTS THEREOF IS THE PROPERTY OF HARGER INC., AND IS FURNISHED TO YOU FOR INFORMATION ONLY. THE INFORMATION CONTAINED HEREIN IS CONFIDENTIAL AND OF A PROPRIETARY NATURE AND MUST NOT BE DISCLOSED TO THIRD PARTIES WITHOUT THE EXPRESS WRITTEN APPROVAL OF HARGER INC.

LET	REVISION	DATE	BY
–	–	–	–

TOLERANCES UNLESS NOTED:
FRACTIONAL +/- 1/16
DECIMAL +/- .030
BREAK SHARP EDGES

3RD ANGLE PROJECTION

PART NO. GESB1/0
COPPER ALLOY SPLIT BOLT CONNECTOR
– –

DRAWN BY: LAL
CHECKED BY:
DATE: 101321

HARGER™
301 ZIEGLER DRIVE
GRAYSLAKE, IL 60030
(847) 548-8700

REVISION: –
SCALE: FULL
SHEET: 1 OF 1