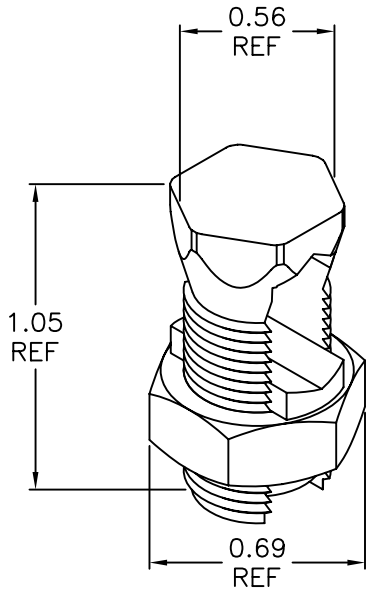

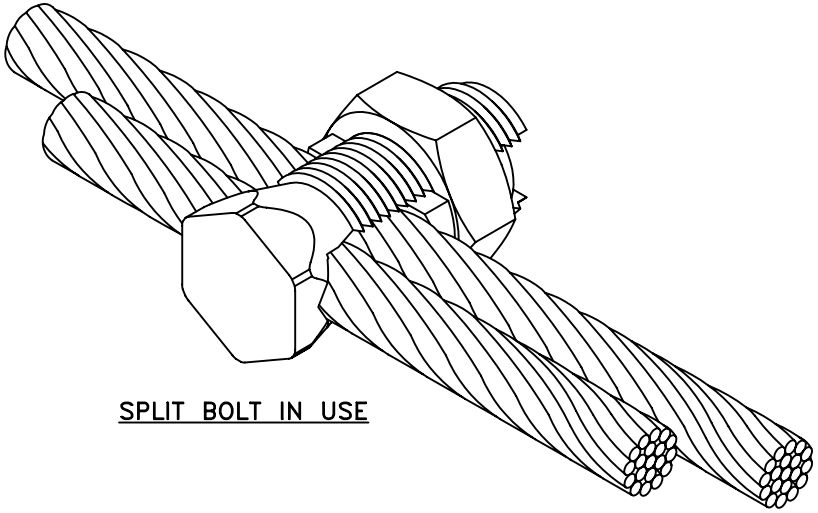

SPLIT BOLT IN USE

COPPER ALLOY SPLIT BOLT CONNECTOR

RANGE FOR EQUAL RUN AND TAP: 8 SOL – 4 SOL (ø0.128–ø0.204)
MINIMUM TAP 16 SOL ; MAX CONDUCTOR 3 #12 STR.
TORQUE (165 IN/LB)

EST. WEIGHT 0.06 LBS

APPROVED

☐ AS DRAWN: _____

☐ AS NOTED: _____

DATE: _____

THIS DOCUMENT AND THE CONTENTS THEREOF IS THE PROPERTY OF HARGER INC., AND IS FURNISHED TO YOU FOR INFORMATION ONLY. THE INFORMATION CONTAINED HEREIN IS CONFIDENTIAL AND OF A PROPRIETARY NATURE AND MUST NOT BE DISCLOSED TO THIRD PARTIES WITHOUT THE EXPRESS WRITTEN APPROVAL OF HARGER INC.

LET	REVISION	DATE	BY
–	–	–	–

TOLERANCES UNLESS NOTED:
FRACTIONAL +/- 1/64
.00 +/- .010
.000 +/- .005

3RD ANGLE PROJECTION

PART NO. GESB6

COPPER ALLOY SPLIT BOLT CONNECTOR

– –

DRAWN BY: DVBV

CHECKED BY: –

DATE: 032608

HARGER™

301 ZIEGLER DRIVE
GRAYSLAKE, IL 60030
(847) 548-8700

REVISION: –

SCALE: FULL

SHEET: 1 OF 1