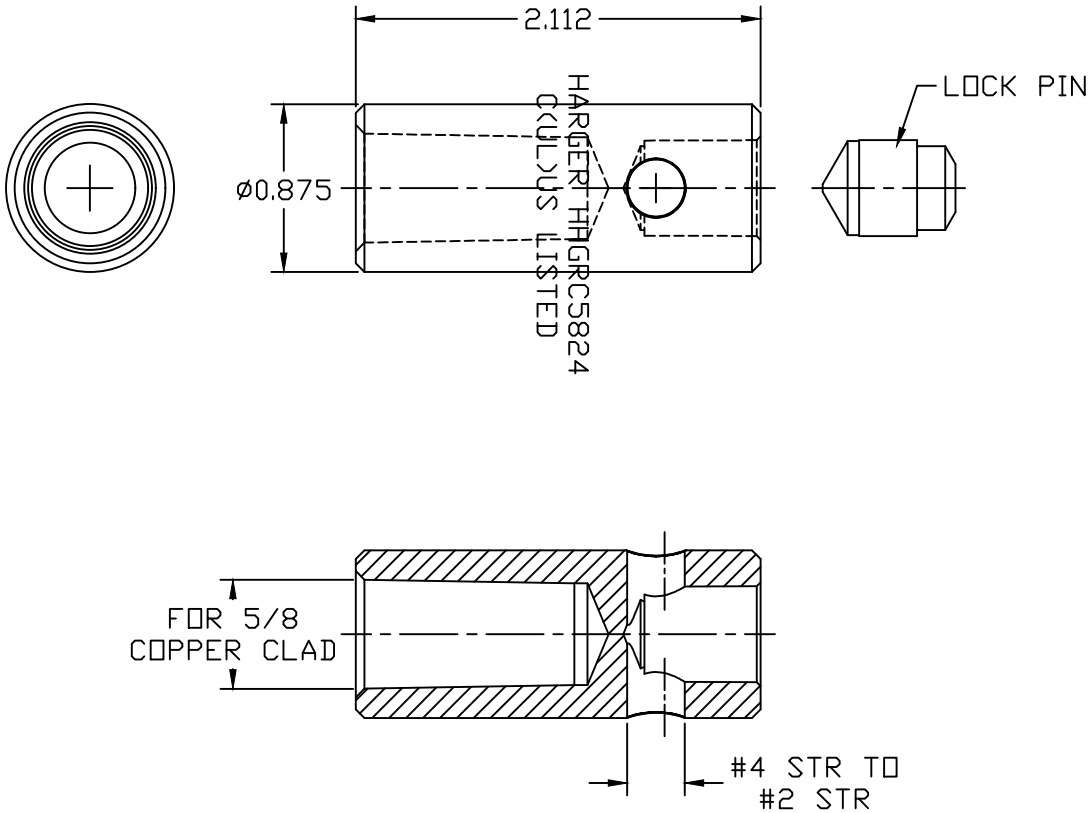

EST WT 0.28#

COPPER HAMMER HEAD
5/8CC #4 STR TO #2 STR

APPROVED

☐ AS DRAWN: _____

☐ AS NOTED: _____

DATE: _____

THIS DOCUMENT AND THE CONTENTS THEREOF IS THE PROPERTY OF HARGER INC., AND IS FURNISHED TO YOU FOR INFORMATION ONLY. THE INFORMATION CONTAINED HEREIN IS CONFIDENTIAL AND OF A PROPRIETARY NATURE AND MUST NOT BE DISCLOSED TO THIRD PARTIES WITHOUT THE EXPRESS WRITTEN APPROVAL OF HARGER INC.

LET	REVISION	DATE	BY
–	–	–	–

TOLERANCES UNLESS NOTED:
FRACTIONAL +/- 1/16
.00 +/- .03
.000 +/- .010

3RD ANGLE PROJECTION

PART NO. HHGRC5824
GROUND ROD CLAMP
– –

DRAWN BY: LAL
CHECKED BY:
DATE: 122322

HARGER®
301 ZIEGLER DRIVE
GRAYSLAKE, IL 60030
(847) 548-8700

REVISION: –
SCALE: FULL
SHEET: 1 OF 1