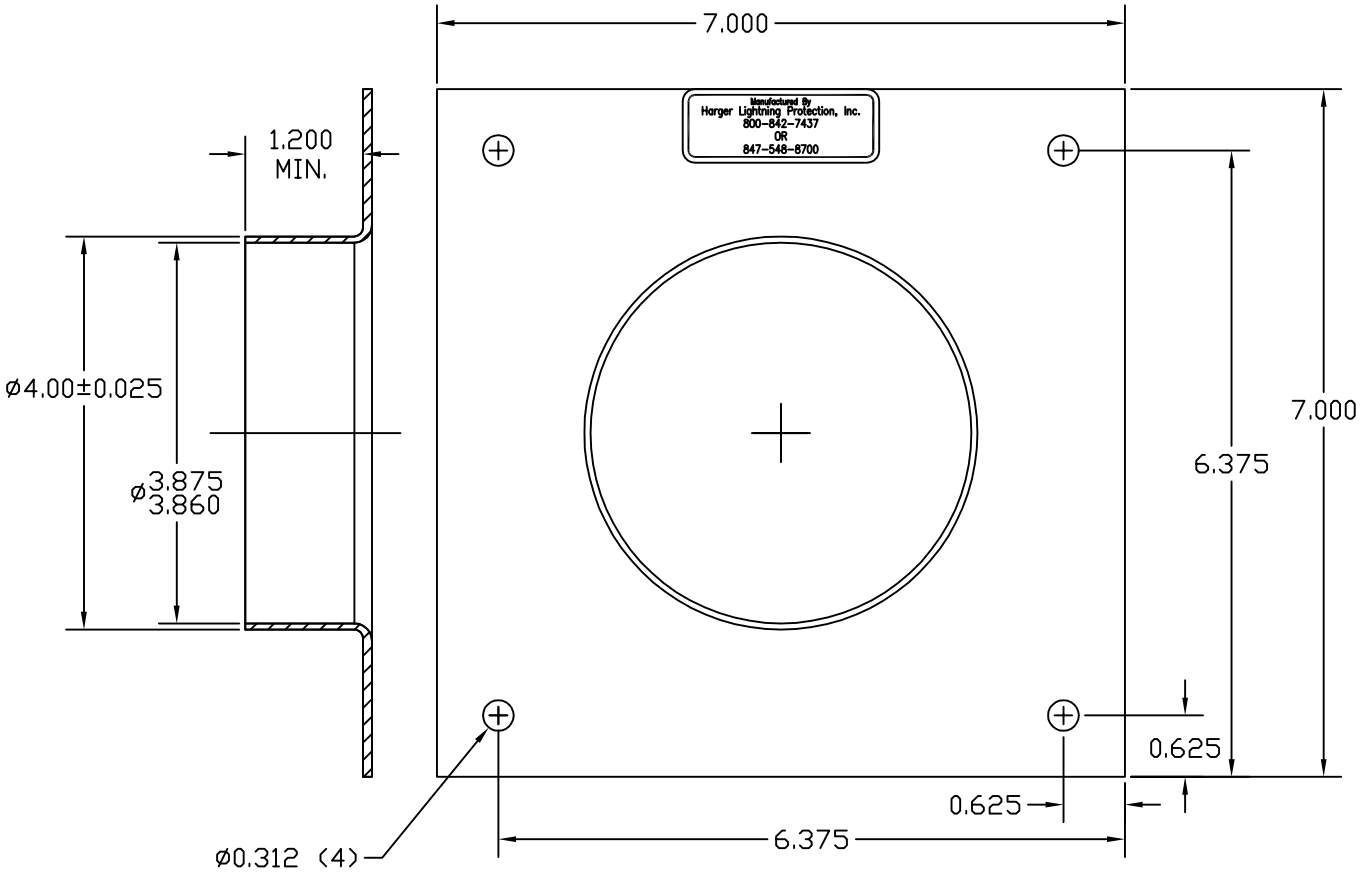

ALUMINUM ENTRY PORT

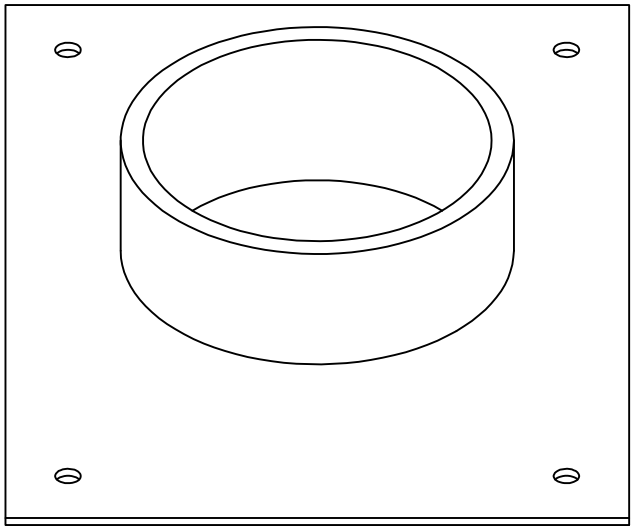

1 UNIT ENTRANCE PANEL
MAPLE POWDERCOAT FINISH

ONE BLACK PVC CAP
INCLUDED FOR EACH PORT.

MOUNTING HARDWARE INCLUDED

ESTIMATED WEIGHT: 0.50#

APPROVED

☐ AS DRAWN: _____

☐ AS NOTED: _____

DATE: _____

THIS DOCUMENT AND THE CONTENTS THEREOF IS THE PROPERTY OF HARGER INC., AND IS FURNISHED TO YOU FOR INFORMATION ONLY. THE INFORMATION CONTAINED HEREIN IS CONFIDENTIAL AND OF A PROPRIETARY NATURE AND MUST NOT BE DISCLOSED TO THIRD PARTIES WITHOUT THE EXPRESS WRITTEN APPROVAL OF HARGER INC.

LET	REVISION	DATE	BY

TOLERANCES UNLESS NOTED:
FRACTIONAL +/- 1/16
.00 +/- .030
.000 +/- .010

PART NO. HLG220TWP

DRAWN BY: LAL

CHECKED BY:

DATE: 031914

HARGER™
301 ZIEGLER DRIVE
GRAYSLAKE, IL 60030
(847) 548-8700

REVISION: C

SCALE: 1/2

SHEET: 1 OF 1