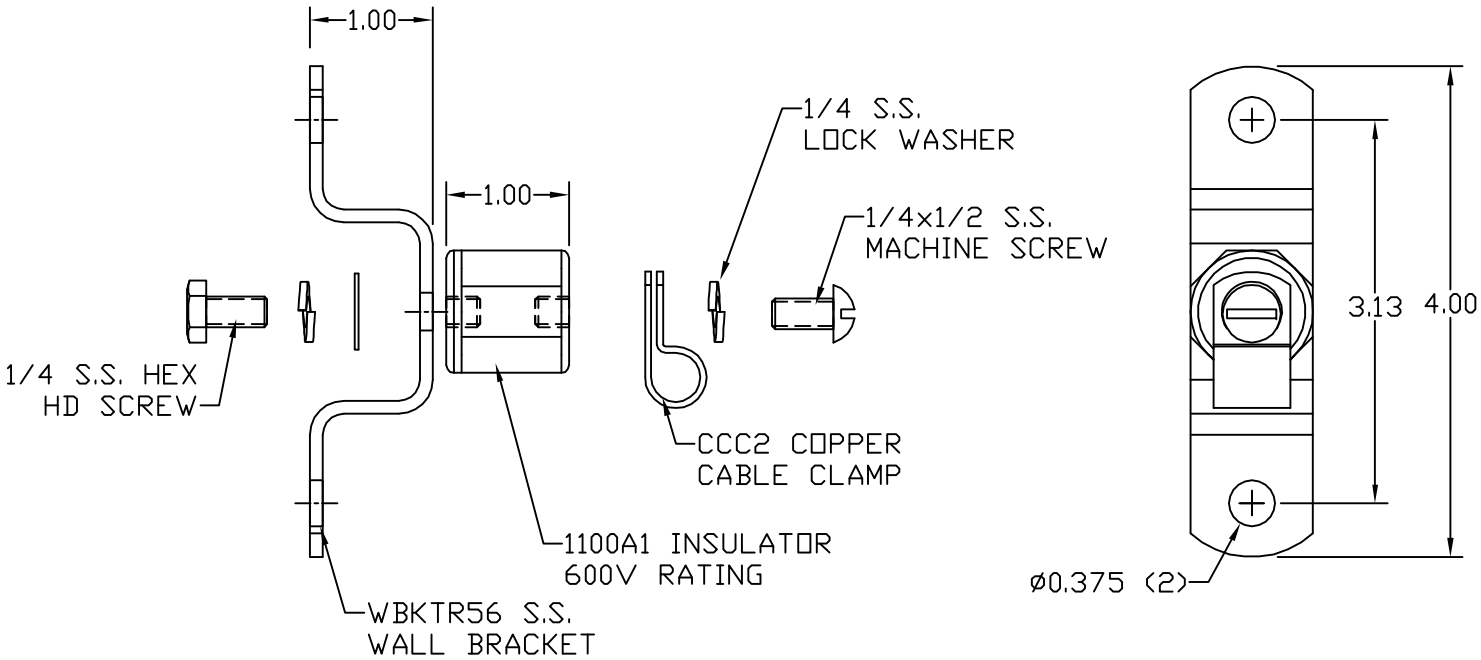

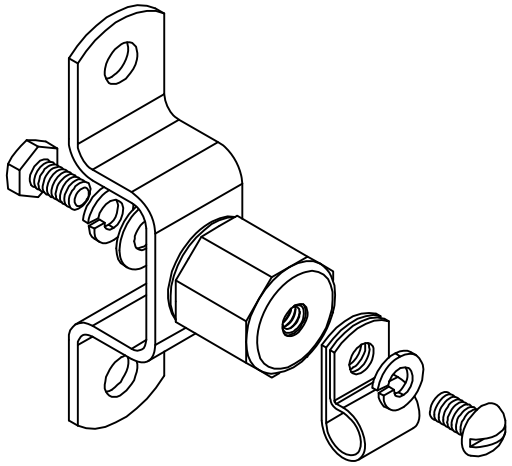

HALO STANDOFF CLAMP 2 IN.

EST WT: 0.5#

APPROVED

☐ AS DRAWN: _____

☐ AS NOTED: _____

DATE: _____

THIS DOCUMENT AND THE CONTENTS THEREOF IS THE PROPERTY OF HARGER INC., AND IS FURNISHED TO YOU FOR INFORMATION ONLY. THE INFORMATION CONTAINED HEREIN IS CONFIDENTIAL AND OF A PROPRIETARY NATURE AND MUST NOT BE DISCLOSED TO THIRD PARTIES WITHOUT THE EXPRESS WRITTEN APPROVAL OF HARGER INC.

LET	REVISION	DATE	BY
–	–	–	–

TOLERANCES UNLESS NOTED:
FRACTIONAL +/- 1/16
.00 +/- .03
.000 +/- .010

3RD ANGLE PROJECTION

PART NO. HSC100CR56

HALO STANDOFF CLAMP

– –

DRAWN BY: BK

CHECKED BY:

DATE: 033106

HARGER™

301 ZIEGLER DRIVE
GRAYSLAKE, IL 60030
(847) 548-8700

REVISION: –

SCALE: 5/8

SHEET: 1 OF 1