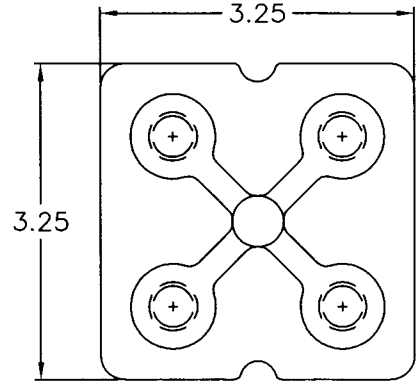

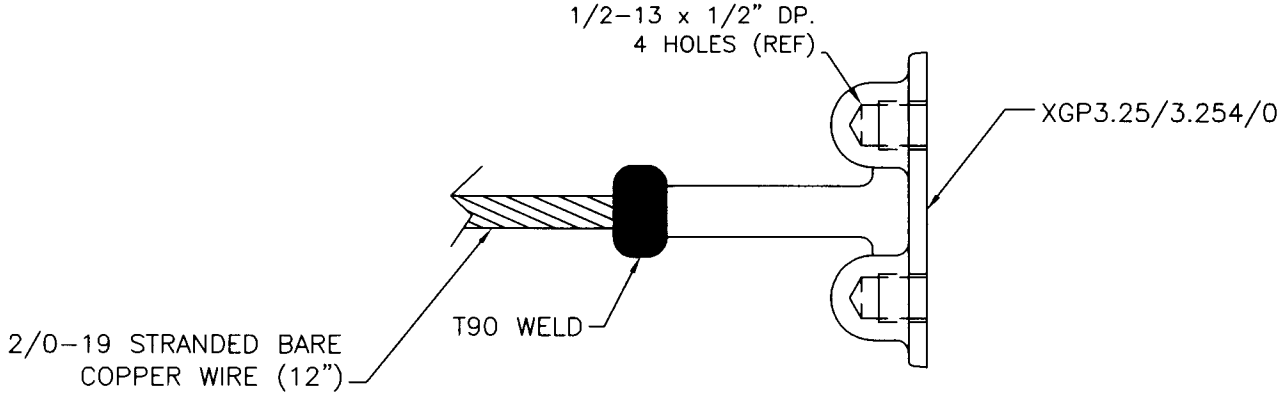

NOTE:
- MADE FROM HIGH CONDUCTIVITY COPPER ALLOY
- NEMA HOLE SPACING

GROUND PLATE

THIS DOCUMENT AND THE CONTENTS THEREOF IS THE PROPERTY OF HARGER INC., AND IS FURNISHED TO YOU FOR INFORMATION ONLY. THE INFORMATION CONTAINED HEREIN IS CONFIDENTIAL AND OF A PROPRIETARY NATURE AND MUST NOT BE DISCLOSED TO THIRD PARTIES WITHOUT THE EXPRESS WRITTEN APPROVAL OF HARGER INC.

LET	REVISION	DATE	BY
–	–	–	–

TOLERANCES UNLESS NOTED:
FRACTIONAL +/- 1/64
.00 +/- .010
.000 +/- .005

PART NO. XGPBSD2/0X12
–
– –

DRAWN BY: EHS
CHECKED BY:
DATE: 091102

HARGER™
301 ZIEGLER DRIVE
GRAYSLAKE, IL 60030
(847) 548-8700

REVISION: –
SCALE: 1/2
SHEET: –